Interconnect board mapping

Connector-Pin	External connection	Internal connection	Signal Name (net name)	Description
Battery voltage ADC inputs, Indicator LED, Reset Switch, Misc Switch				
J1-1	system controller battery +	J8-1 via voltage divider	system_battery	system controller battery, divider ADC
J1-2	reset switch NO	J8-35	reset_switch	reset momentary SW normally open, 10K pull
J1-3	reset switch common		GND	reset switch common
J1-4	manual override switch NO	J8-37	manual_override_switch	manual toggle switch normally open, 10K pull
J1-5	manual override common		GND	manual switch common
J1-6	Micro-controller battery +	J8-3 via voltage divider	microcontroller_battery	micro battery, divider ADC, from bottom
J1-7	green LED anode	SW1-1 (2N3904 NPN)	status_indicator_red	error LED +, error, fault in system
J1-8	green LED cathode	GND via 330Ohm	GND	error LED ground
J1-9	red LED anode	SW2-9 (2N3904 NPN)	status_indicator_green	ready LED +, self test passed, system ready
J1-10	red LED cathode	GND via 330Ohm	GND	ready LED ground
Electronic Compass, I2C interface, Robot Electronics CMPS03				
J2-1	Electronic compass, Pin1		5V	compass 5 volts
J2-2	Electronic compass, Pin9		GND	compass ground
J2-3	Electronic compass, Pin2	J8-18 via 330 Ohm	electronic_compass_I2C_SCL	compass i2c SCL, 330 Ohm, 2.2K pull-down
J2-4	Electronic compass, Pin3	J8-20 via 330 Ohm	electronic_compass_I2C_SDA	compass i2c SDA, 330 Ohm, 2.2K pull-down
RS232 level signals from COM1 and 2 on system controller, goes to RS232 translator, then to micro-controllers				
J3-1	COM1, Pin7, DB9	Tran1-3	level_converter_1_RTS_host	pin10 on RS232 translator #1 (brown)
J3-2	COM1, Pin2, DB9	Tran1-10	level_converter_1_RX_host	pin3 on RS232 translator #1 (white)
J3-3	COM1, Pin3, DB9	Tran1-9	level_converter_1_TX_host	pin4 on RS232 translator #1 (yellow)
J3-4	COM1, Pin4, DB9	Tran1-6	level_converter_1_DTR_host	pin7 on RS232 translator #1 (blue)
J3-5	COM1, Pin5, ground	Interconnect board ground	GND	(black)
J3-6	COM2, Pin7, DB9	Tran2-3	level_converter_2_RTS_host	
J3-7	COM2, Pin2, DB9	Tran2-10	level_converter_2_RX_host	
J3-8	COM2, Pin3, DB9	Tran2-9	level_converter_2_TX_host	
J3-9	COM2, Pin4, DB9	Tran2-6	level_converter_2_DTR_host	
J3-10	COM2, Pin5, ground	Interconnect board ground	GND	
Encoder, AB quadrature				
J4-1	Encoder, Pin1		5V	Encoder 5 volts
J4-2	Encoder, Pin2	Enc-13	a_channel	quadrature encoder a channel
J4-3	Encoder, Pin3		GND	encoder ground
J4-4	Encoder, Pin4	Enc-14	b_channel	quadrature encoder b channel

Communication and programming cable to navigation and platform controller				
J5-1	Platform, J5 Pin1, reset arm	Tran1-4	level_converter_1_reset_arm	platform controller reset signal (blue)
J5-2	Platform, J5 Pin2, TX	Tran1-11	level_converter_1_TX_arm	platform controller TX (white)
J5-3	Platform, J5 Pin3, RX	Tran1-8	level_converter_1_RX_arm	pin5 on RS232 translator #2 (yellow)
J5-4	Platform, J5 Pin5, loadC	Tran1-2	level_converter_1_loadC_arm	pin11 on RS232 translator #2 (brown)
J5-5	Plat. and Nav., Pin6, Ground	Interconnect board ground	GND	ground
J5-6	Plat. and Nav., Pin4, 5V	Interconnect board 5V	5V	Positive 5 volts
J5-7	Navigation, J5 Pin5, loadC	Tran2-2	level_converter_2_loadC_arm	pin11 on RS232 translator #2 (brown)
J5-8	Navigation, J5 Pin3, RX	Tran2-8	level_converter_2_RX_arm	pin5 on RS232 translator #2 (yellow)
J5-9	Navigation, J5 Pin2, TX	Tran2-11	level_converter_2_TX_arm	navigation controller TX (white)
J5-10	Navigation, J5 Pin1, reset arm	Tran2-4	level_converter_2_reset_arm	navigation controller reset signal (blue)

PING sonar rangefinders, Radio module throttle and steering, Throttle and steering control signals				
J6-1	right, center, and left GND		GND	ground (pin 1)
J6-2	right, center, and left 5V		5V	5 volts (pin 2)
J6-3	Right sonar, Pin3	J8-21	sonar_right_PULSIN	right hand sonar module (pin 3)
J6-4	Center sonar, Pin3	J8-19	sonar_center_PULSIN	center sonar module (pin 4)
J6-5	Left sonar, Pin3	J8-17	sonar_left_PULSIN	left hand sonar module (pin 5)
J6-6	RC Radio Module Chan?	J8-36	radio_controller_steering_PULSIN	steering pulse-out from radio module? (pin 1)
J6-7	RC Radio Module Chan?	J8-38	radio_controller_throttle_PULSIN	throttle pulse-out from radio module? (pin 2)
J6-8	Radio module ground		GND	radio module ground (pin 3)
J6-9	steering servo control input	J8-30	steering_control_PULSOUT	steering control signal to servo? (pin 1)
J6-10	motor driver control input	J8-32	throttle_control_PULSOUT	throttle control signal to motor drive? (pin 2)

Infrared rangefinders, bumper switch				
J7-1	Right infrared module, Pin3		5V	right hand infrared 5V (brown)
J7-2	Right infrared module, Pin2		GND	right hand infrared ground (black)
J7-3	Right infrared module, Pin1	J8-7	infrared_right	right hand infrared signal (green)
J7-4	Left infrared module, Pin3		5V	left hand infrared 5V (red)
J7-5	Left infrared module, Pin2		GND	left hand infrared ground (black)
J7-6	Left infrared module, Pin1	J8-5	infrared_left	left hand infrared signal(white)
J7-7	Right bumper switch NO	J8-27	bumper_switch_right	right bumper normally open (red), 10K pullup
J7-8	Right bumper switch COM		GND	right bumper common (white)
J7-9	Left bumper switch NO	J8-25	bumper_switch_left	left bumper normally open (green), 10K pullup
J7-10	Left bumper switch COM		GND	left bumper common (black)

Platform and navigation controller ADC and Digital I/O, Coridium				
J8-1	Platform controller ADC0	J1-1, via voltage divider	system_battery	system controller battery voltage divider
J8-2	Navigation Controller ADC0	Acc-8	accelerometer_x_axis	J2 Pin1, AD00
J8-3	Platform controller ADC1	J1-6 (NC) via voltage divider	microcontroller_battery	peripheral controller battery voltage divider
J8-4	Navigation Controller ADC1	Acc-9	accelerometer_y_axis	J2 Pin2, AD01
J8-5	Platform controller ADC2	J7-6	infrared_left	left infrared rangefinder voltage, 0-3.3V
J8-6	Navigation Controller ADC2	Acc-16	accelerometer_z_axis	J2 Pin3, AD02
J8-7	Platform controller ADC3	J7-3	infrared_right	right infrared rangefinder voltage, 0-3.3V
J8-8	Navigation Controller ADC3		rate_gyro_x_axis	not installed
J8-9	Platform controller ADC4		temperature_sensor_1	not installed
J8-10	Navigation Controller ADC4		rate_gyro_x_axis	not installed
J8-11	Platform controller ADC5			
J8-12	Navigation Controller ADC5			
J8-13				Unused
J8-14				Unused
J8-15				Unused
J8-16				Unused
J8-17	Platform controller Digital0	J6-5	sonar_left_PULSIN	left sonar rangefinder I/O (pulse in)
J8-18	Navigation Controller Digital0	J2-3 via 330 Ohm	electronic_compass_I2C_SCL	electronic compass module i2c clock
J8-19	Platform controller Digital1	J6-4	sonar_center_PULSIN	center sonar rangefinder I/O (pulse in)
J8-20	Navigation Controller Digital1	J2-4 via 330 Ohm	electronic_compass_I2C_SDA	electronic compass module i2c data line
J8-21	Platform controller Digital2	J6-3	sonar_right_PULSIN	ping sonar module pulse-in signal
J8-22	Navigation Controller Digital2	Enc-5 via 1K Ohm	encoder_counter_SPI_SCLK	SPI clock signal, series 1K resistor
J8-23	Platform controller Digital3		sonar_rear_PULSIN	not presently used
J8-24	Navigation Controller Digital3	Enc-4 via 1K Ohm	encoder_counter_SPI_SS	SPI slave select signal, series 1K resistor
J8-25	Platform controller Digital4	J7-9	bumper_switch_left	left bumper switch, attached to bumper bar
J8-26	Navigation Controller Digital4	Enc-7 via 1K Ohm	encoder_counter_SPI_MOSI	SPI master out slave in signal, series 1K
J8-27	Platform controller Digital5	J7-7	bumper_switch_right	right bumper switch, attached to bumper bar
J8-28	Navigation Controller Digital5	Enc-6 via 1K Ohm	encoder_counter_SPI_MISO	SPI master in slave out, series 1K resistor
J8-29	Platform controller Digital6	SW1-2, via 1K Ohm	status_indicator_red	error LED, drive base of transistor 1 via 1K
J8-30	Navigation Controller Digital6	J6-9	steering_control_PULSOUT	pulse-out signal to steering servo
J8-31	Platform controller Digital7	SW2-10, via 1K Ohm	status_indicator_green	ready LED, drive base of transistor 2 via 1K
J8-32	Navigation Controller Digital7	J6-10	throttle_control_PULSOUT	Pulse-out signal to motor drive
J8-33				Unused
J8-34				Unused
J8-35	Platform Controller Digital8	J1-2	reset_switch	reset switch input
J8-36	Navigation Controller Digital8	J6-6	radio_controller_steering_PULSIN	RC module steering signal input
J8-37	Platform Controller Digital9	J1-4	manual_override_switch	manual override switch input
J8-38	Navigation Controller Digital9	J6-7	radio_controller_throttle_PULSIN	RC module throttle signal input
J8-39	Platform Controller Digital10	J8-40 via 1K Ohm resistor	navigation_controller_SEROUT	steering and throttle serial output
J8-40	Navigation Controller Digital10	J8-39 via 1K Ohm, resistor	platform_controller_SERIN	steering and throttle serial input
J8-41				
J8-42				

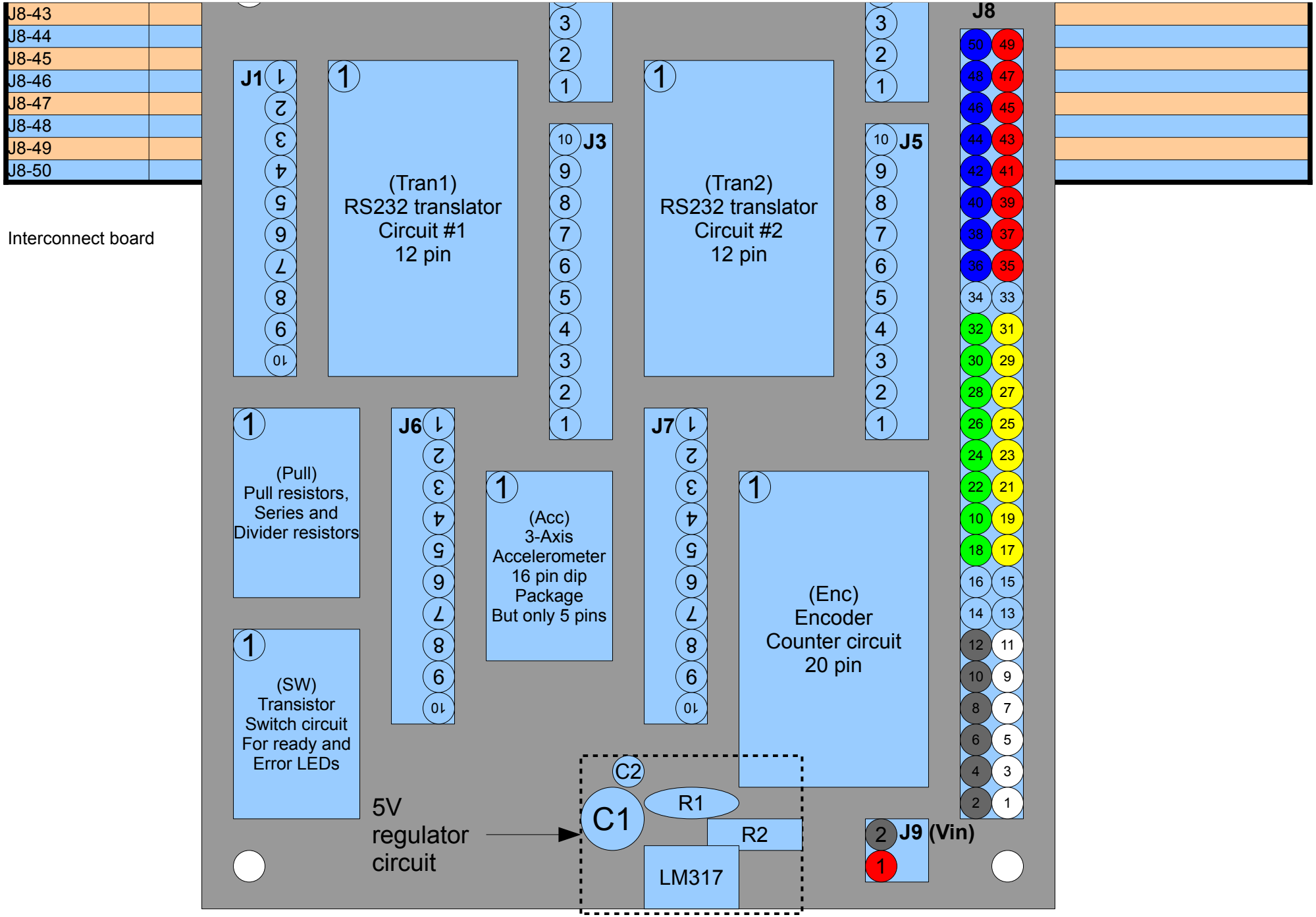

Interconnect board

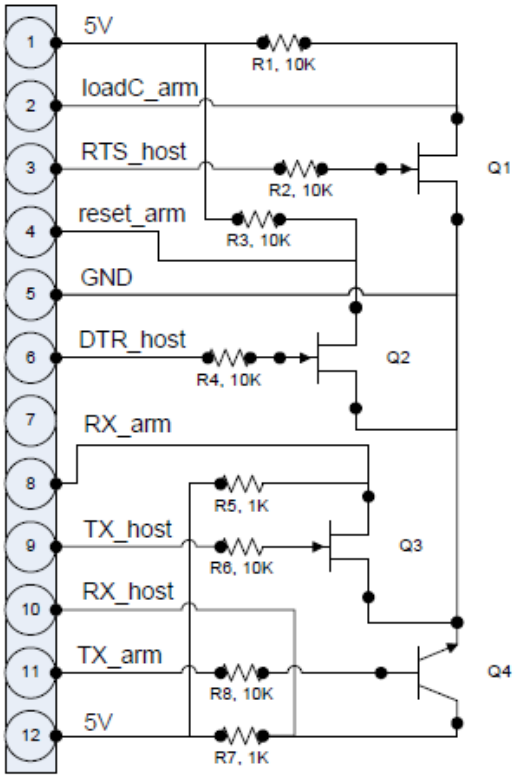

RS232 translator board

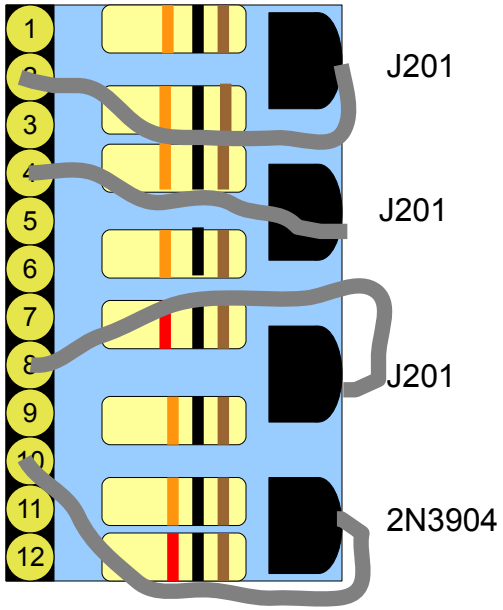

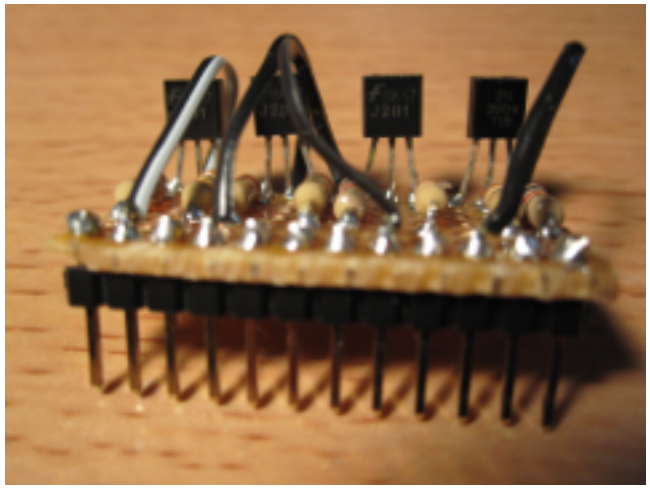

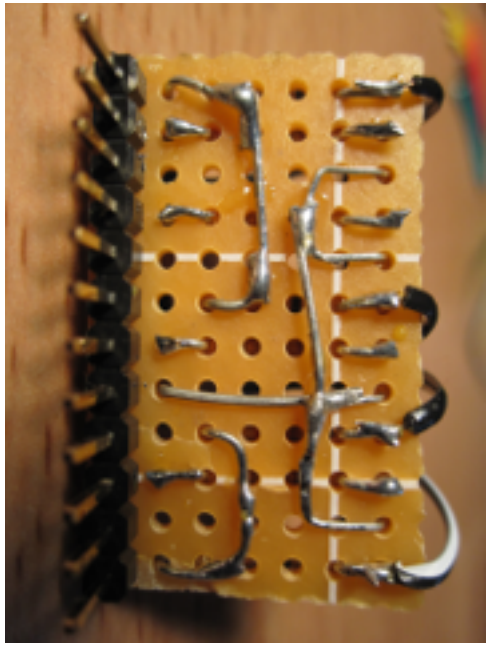

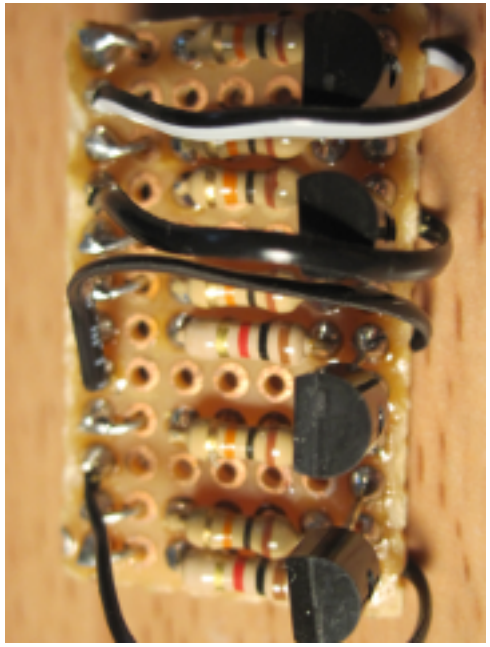

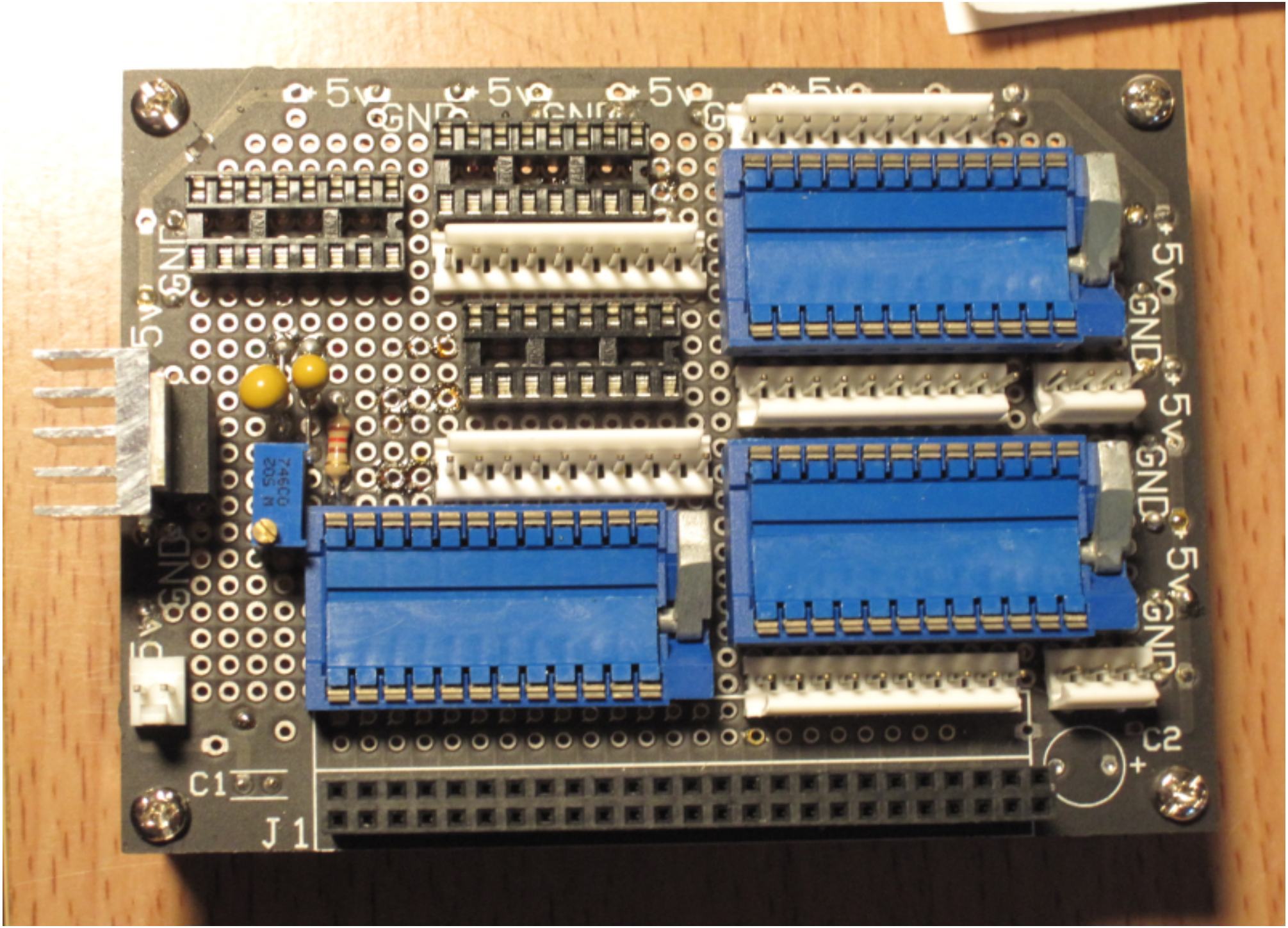
5v
GND
C1
J1
C2
+

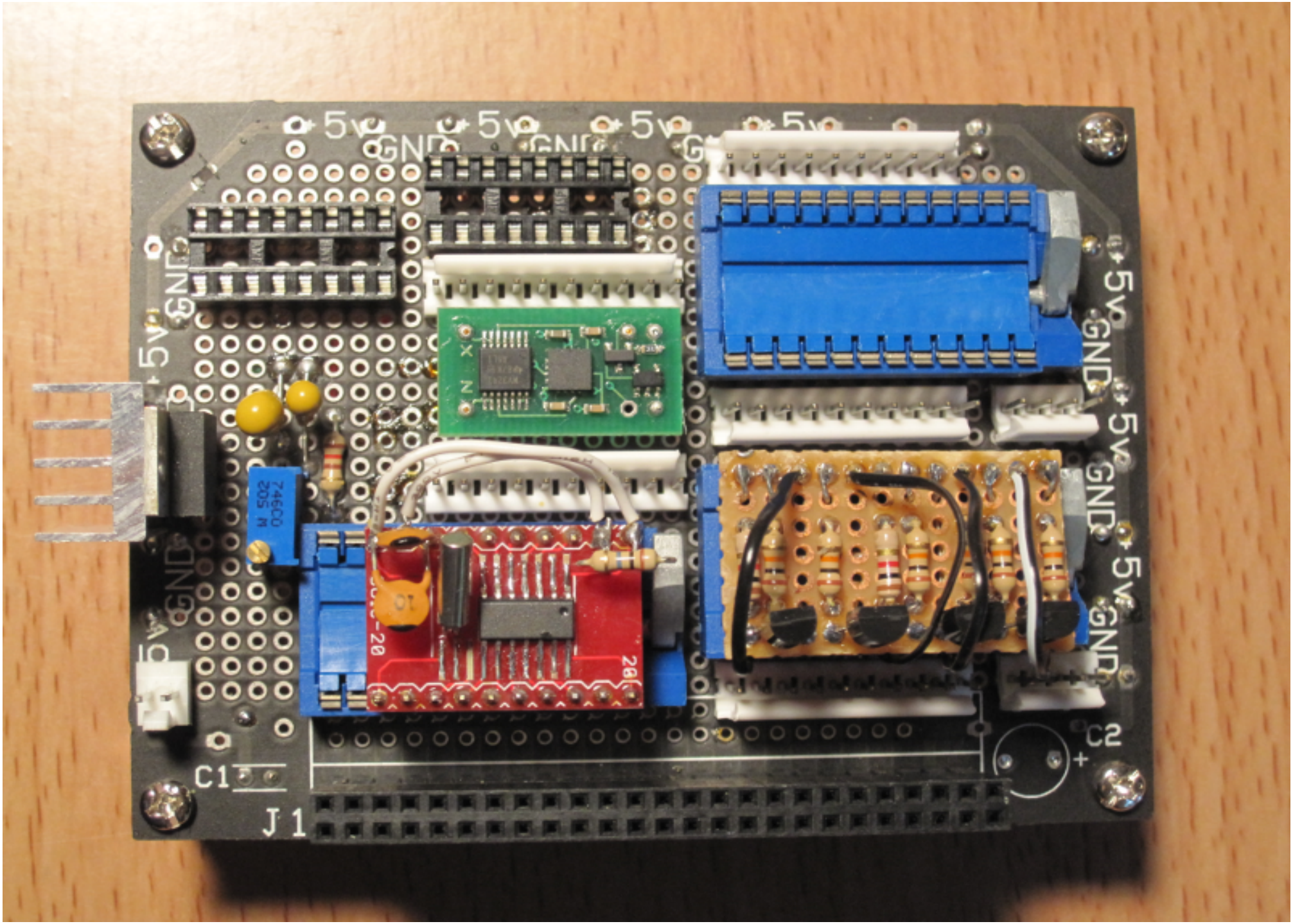
+5v
GND
C1
C2
J1

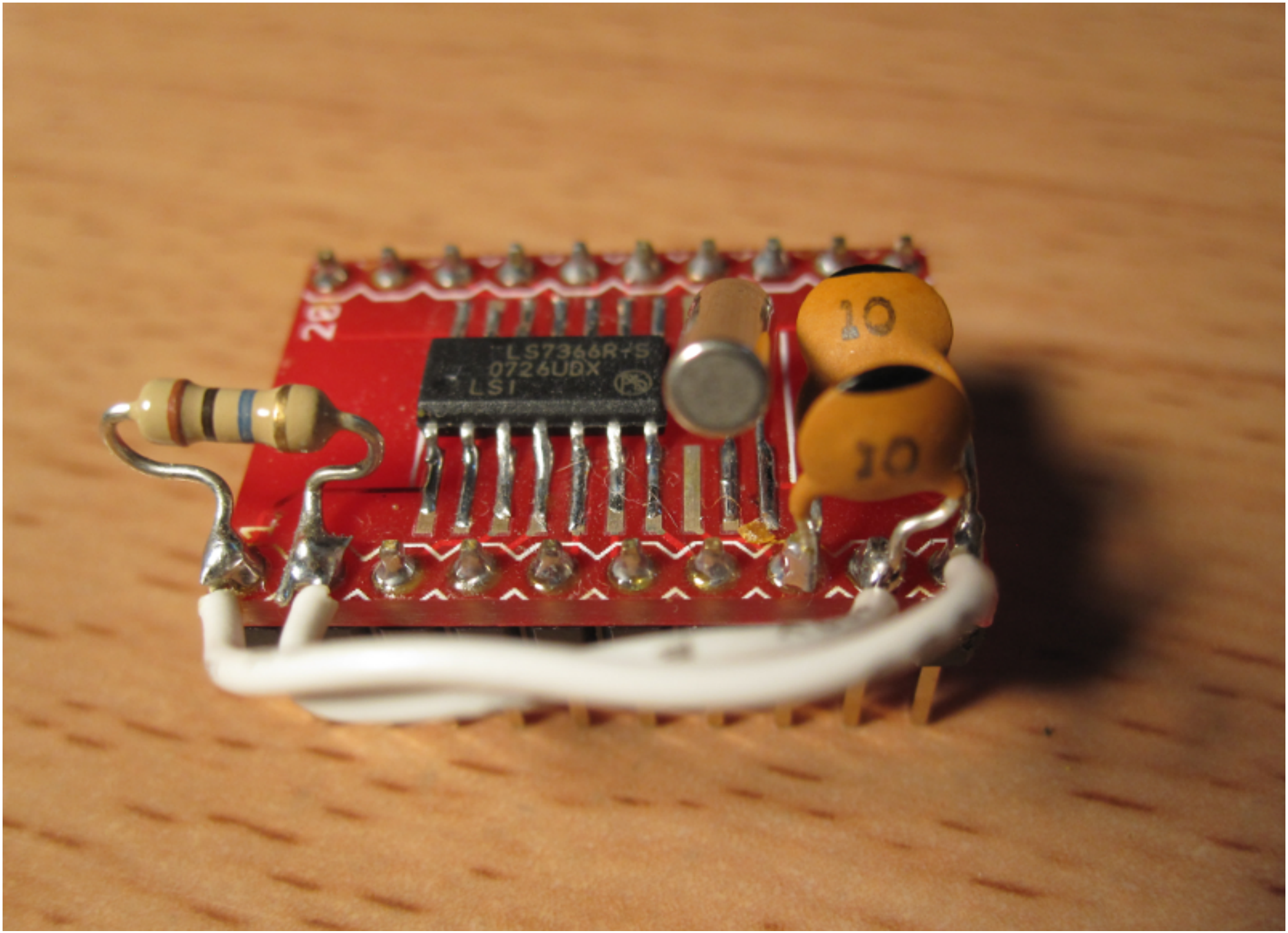
LS7366R-S
0726UDX
LS1
10
10

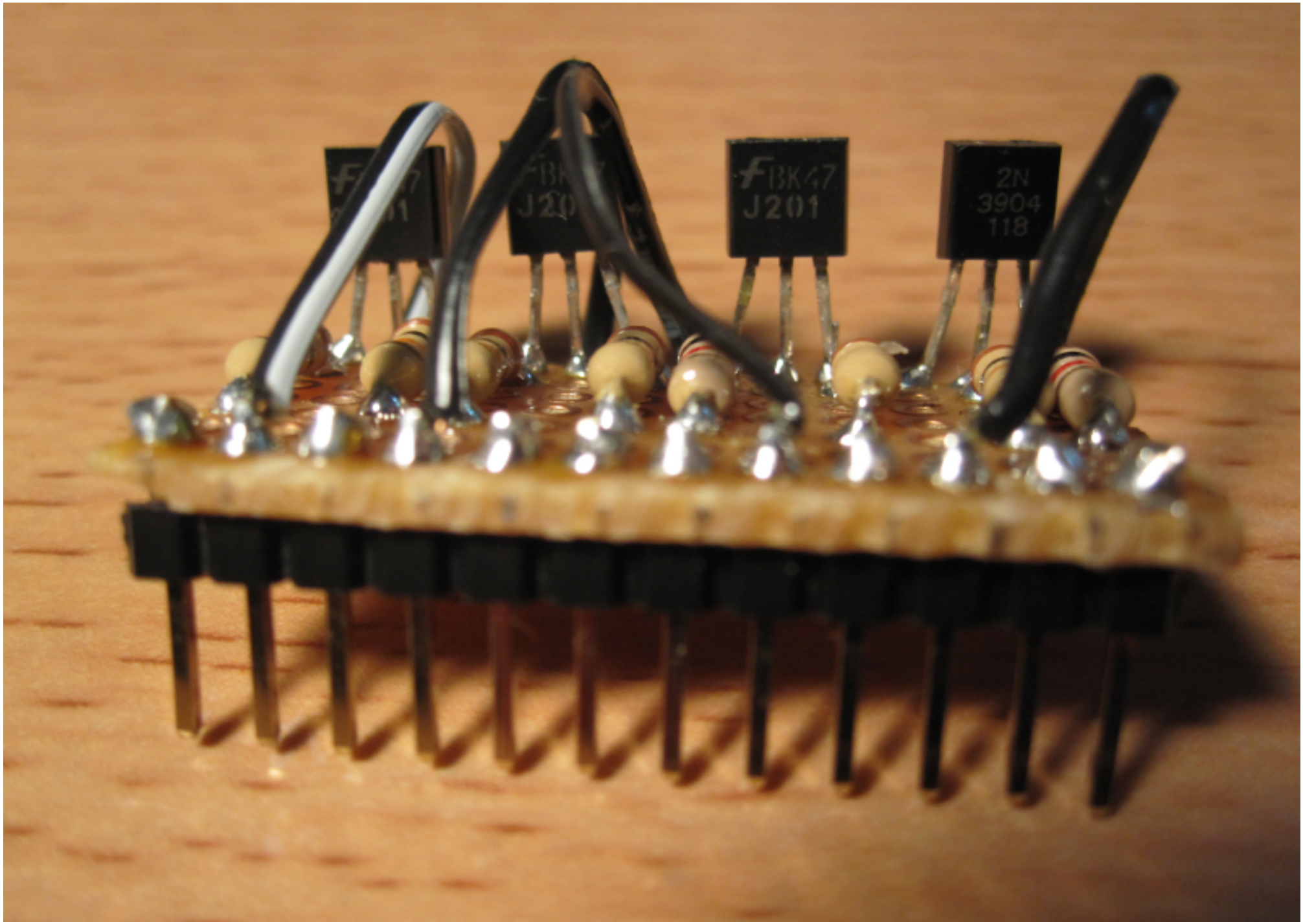
FBK47
J201
2N
3904
118

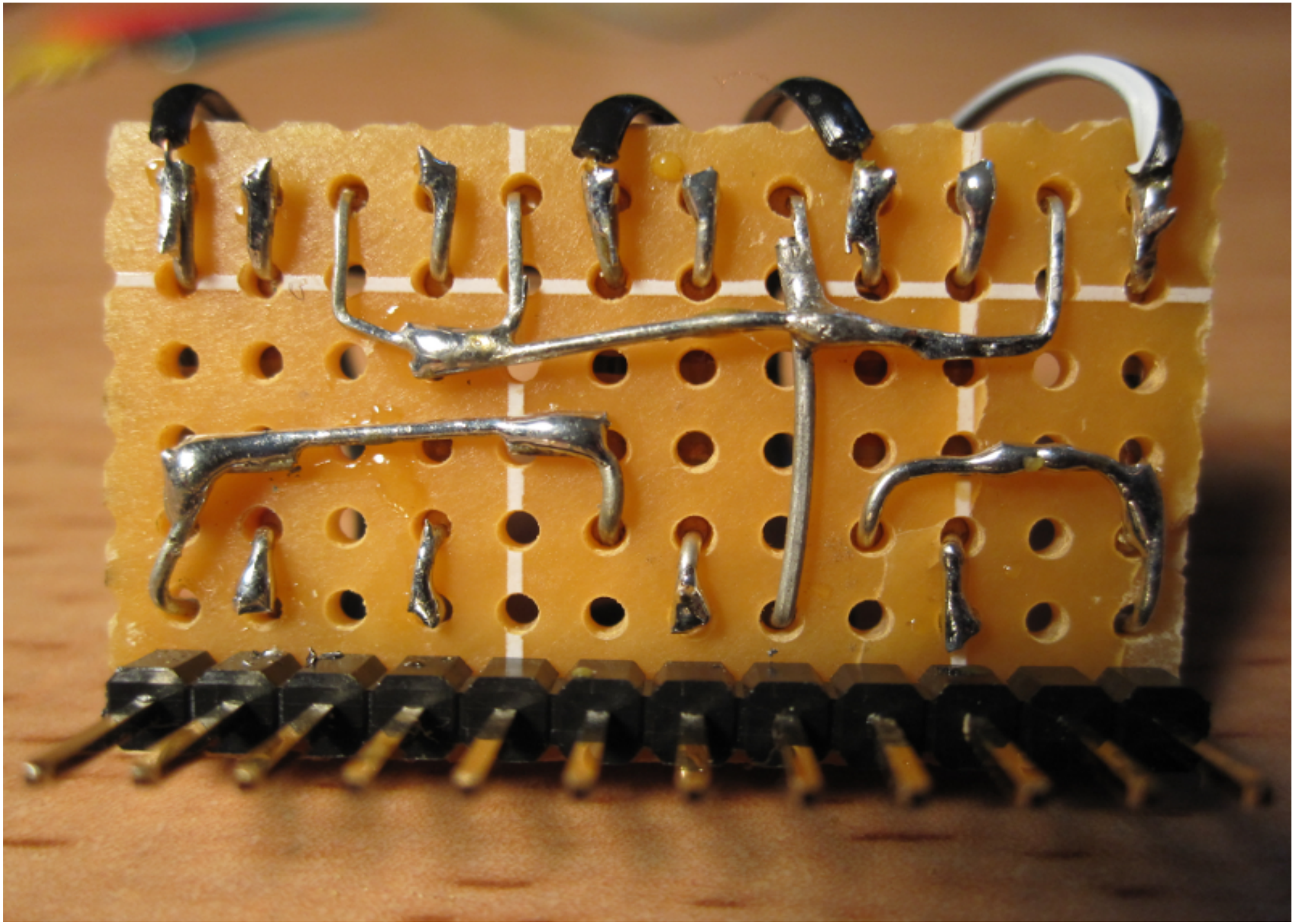
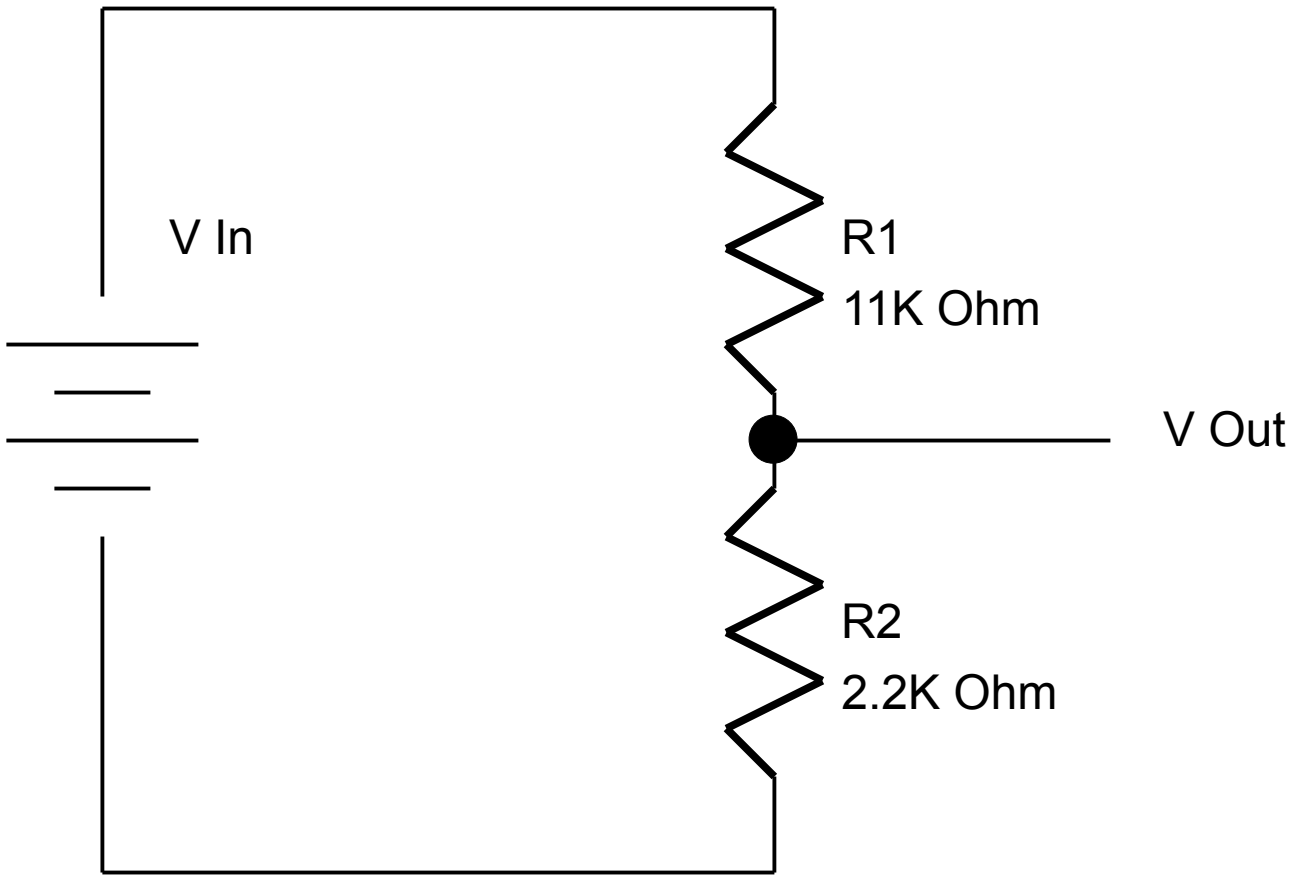
V Out = (R2/(R1+R2)) * V In